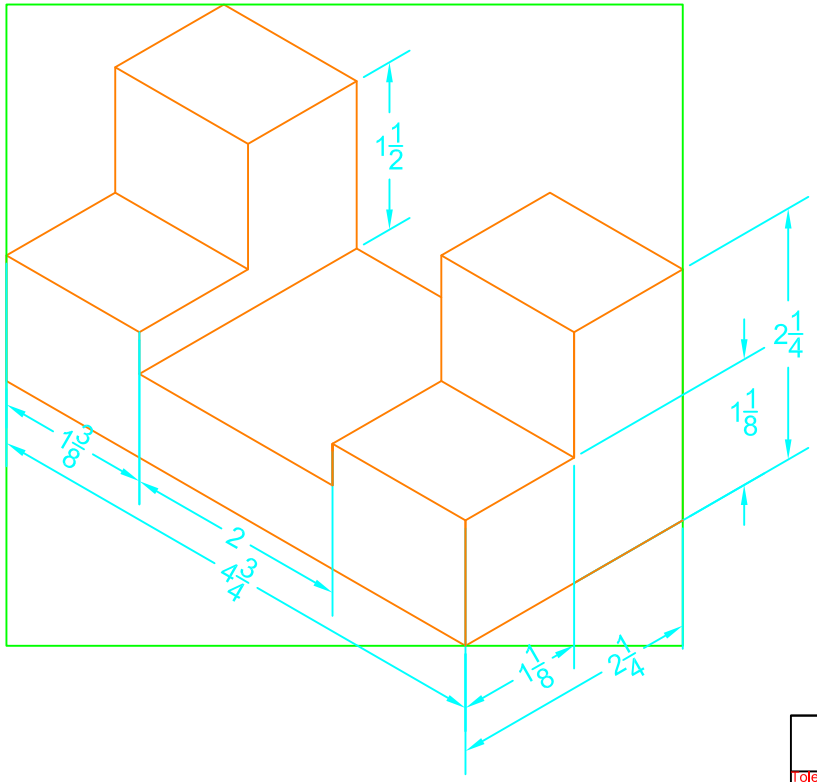

Northern Highlands Regional High School			
Tolerance + -	Real World Engineering		
Decimal + 0.00 -	Scale Full	Material	Drawn By Zain Khanna
Fraction + 1/64 -	Title Isometric Holder		
Angular + 30 -	Date 10-13-11	Drawing Number Drawing Number 9	